NÜOBELL S

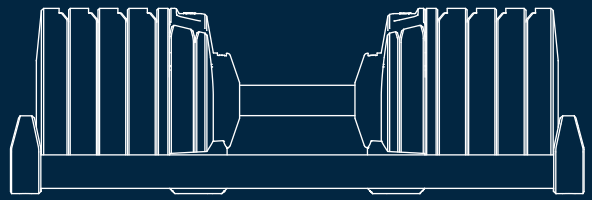

User Manual

NÜO

www.nuoathletics.com

Read and understand this complete manual before using your NÜOBELL. Keep it for future reference. Do not use this product unless you have read and fully understood all instructions and warnings in this manual. Follow all instructions and warnings each time you use the product. Improper use may result in serious injury or death.

NUO Athletic Innovation assumes no responsibility for injury, damage, or malfunction resulting from misuse, negligence, failure to follow instructions, unauthorized modifications, use of non-original parts, or use of the product in a manner inconsistent with its intended residential purpose. These dumbbells are precision mechanical products. They are not toys. Careless or reckless use may cause serious injury or death.

Table of contents

Introduction..... 2
Safety warnings..... 3
Do not use & Troubleshooting..... 5
Safety Instructions..... 7
Product overview..... 9
Assembly..... 11
Locking mechanism test..... 13
Operation..... 15
Maintenance..... 17
Warranty..... 18
Accessories..... 19
Patents..... 20
Purchase and Arbitration Agreement..... 21

Great power comes with great responsibility.

Congratulations on acquiring your very own NÜOBELL S® Adjustable Dumbbells. With the NÜOBELL S®, we're all about lifting possibilities. We offer the heavy weights, but foremost a convenient way to make them fit your lifestyle. Our passion lies in helping you discover your potential through versatility and ingenious design. That's why we condensed no less than 40 standard dumbbells into one exquisite masterpiece. We pioneered this brilliance, and what you're about to experience is the result of years of dedication and design expertise.

We're supporters on your fitness journey – your success is our success. If you have any questions, you're welcome to contact us at: info@nuoathletics.com.

Find the manual in other languages:

Español
Deutsch
Français

This symbol indicates a potentially hazardous situation which, if not avoided, could result in serious injury or death. Follow all warnings marked with this symbol throughout this manual.

Important!

Improper use, incorrect adjustment, or failure to ensure proper locking may cause weight plates to detach suddenly, resulting in serious injury or death. Do not exceed the maximum rated weight capacity.

Model	Weight Range	Increment	Max Weight
S 224	2-24 kg	2 kg	24 kg
S 240	2-40kg	2 kg	40 kg
S 560	5–60 lb	5 lb	60 lb
S 5100	5–100 lb	5 lb	100 lb

Intended use. These dumbbells are designed for residential use only. Not intended for commercial, institutional, or gym use.

Overhead and face-level movements. Exercise caution when performing movements above the face, head, or body, such as shoulder press, incline press, triceps extension, or pullover. Failure of the locking mechanism or improper engagement during such movements may result in severe injury or death. Verify locking position before every such exercise.

Bench and floor use. Do not drop the dumbbell onto benches, flooring, racks, or other equipment. Do not use kick-up techniques. Unlike fixed dumbbells, adjustable dumbbells may suffer mechanical failure if subjected to impact.

Weight adjustment. Adjust weight only when the dumbbell is fully seated in the cradle. Failure to do so may result in weight plates detaching and causing serious injury.

Before lifting. Do not lift the dumbbell unless the selected weight is fully engaged and locked. Failure to verify proper locking may result in sudden release of weight plates.

Locking verification. After selecting your weight, confirm that the bar ends sit 5 mm inside the outer plate. Failure to verify proper locking may result in sudden release of weight plates.

Connector alignment. Return the dumbbell to the cradle while aligning the slots and wedges on the connectors. Misalignment may cause malfunction or weight separation during use.

Pinch risk. Keep hands and fingers away from the weight plates and mechanism at all times during adjustment.

Drop risk. Dropping the dumbbell may cause serious injury to feet or surrounding persons. Always place the dumbbell on a stable surface when not in use.

Damaged components. Do not use the dumbbell if any component shows signs of damage or malfunction, including cracked plates, bent handle, unusual resistance, rattling, selector skipping, incomplete engagement, or uneven seating. Use of damaged dumbbells may result in sudden failure and serious injury. Immediately discontinue use if the dumbbell is dropped, impacted, or fails inspection.

Modifications. Do not modify the dumbbells or use non-original parts. Modifications may compromise the locking mechanism and cause serious injury.

Misuse. Do not use the dumbbells for push-ups, bodyweight support, or as leverage devices. Do not slam, throw, or drop them. Do not stand on them. Do not store vertically or transport in an unlocked state.

Do not use



Do not use the dumbbell if any of the following apply:

- dropped or impacted dumbbell
- bent handle
- separated plastic on handle
- loose components
- unusual noise/rattling
- unusual resistance
- selector skipping
- incomplete locking
- uneven seating
- damaged connectors

If any of the above apply, discontinue use immediately. Do not use the dumbbell again until it has been inspected by an authorized service provider and has passed the locking mechanism test. The same procedure applies after replacing or repairing any component that affects locking or weight selection.

NEVER FORCE THE WEIGHT SELECTOR. If the selector does not rotate normally, do not use excessive force. Return the dumbbell to the cradle and contact service if the problem remains.

Troubleshooting

Problem	Cause	Action
Handle won't hold plates	Dumbbell dropped or misused	Return to cradle. Discontinue use and contact service.
Selector won't turn	Dumbbell not fully seated in cradle	Return to cradle. Do not force.
Handle won't seat	Connector misalignment	Reseat and align connectors.
Selector skips	Malfunction	Discontinue use and contact service.
Loose or noisy plate	Locking issue or damage	Discontinue use and contact service.

Service and Original Parts

Do not disassemble, modify, or repair the dumbbell. Do not use non-original parts. Service must be performed by NÜO Athletic Innovation or an authorized service provider. Unauthorized service may compromise the locking mechanism and will void the warranty.

For your safety

Before using your dumbbells, this is your do's and don'ts:

Strength training involves inherent risks of serious injury or death. User assumes all risks associated with improper or unintended use.

At home

The NÜOBELL S® Adjustable Dumbbells are indoor champs and strictly made for home base. Do not use them outdoor or in wet locations. During assembly, examine the slots and wedges on the connectors by ensuring the locking clicks perfectly across all weight choices. Never use excessive force to turn the handle, regardless if the dumbbells are in or out of the cradle. Never attempt to use the dumbbell without having the complete set of weight plates in the cradle.

These dumbbells are ready to roll for ages 14 and up. Younger children should neither use nor be near them, teens up to 17 must be supervised while using the dumbbells. The dumbbells are packing some serious weight, when not in use, their cradle is the ultimate support spot.

Before lifting

Consult a physician before diving into workouts. Keep it steady and follow the manual to not over-exert yourself. Before every workout, make sure that your surroundings are free from possible interference and third parties. Your workout free space should be 24 inches (0.6 m) farther than the maximum reach of the exercise in all directions. Use only on a level, stable, non-slip surface. Wear closed-toe athletic footwear during use.

If you start feeling dizzy, pain or tightness during your exercise – stop and breathe. Contact your doctor before you resume.

Handle with care

Do not use the dumbbells as bodyweight support, neither let them free fall or clash with each other. Damage can occur. Protect your gear, protect yourself.

Service and testing

Test the locking mechanism regularly. Follow the procedure on page 13-14, repeated across all weight settings. If the mechanism fails to engage correctly, discontinue use and contact customer service.

Safety signs

Make sure you follow all the dumbbell safety labels. If they become loose, unreadable, or dislodged, contact customer service for replacements.



This manual encompasses NÜOBELL S 224, S 240, S 560 and S 5100. Ignoring these guidelines risks serious harm or even fatal consequences.

Product overview

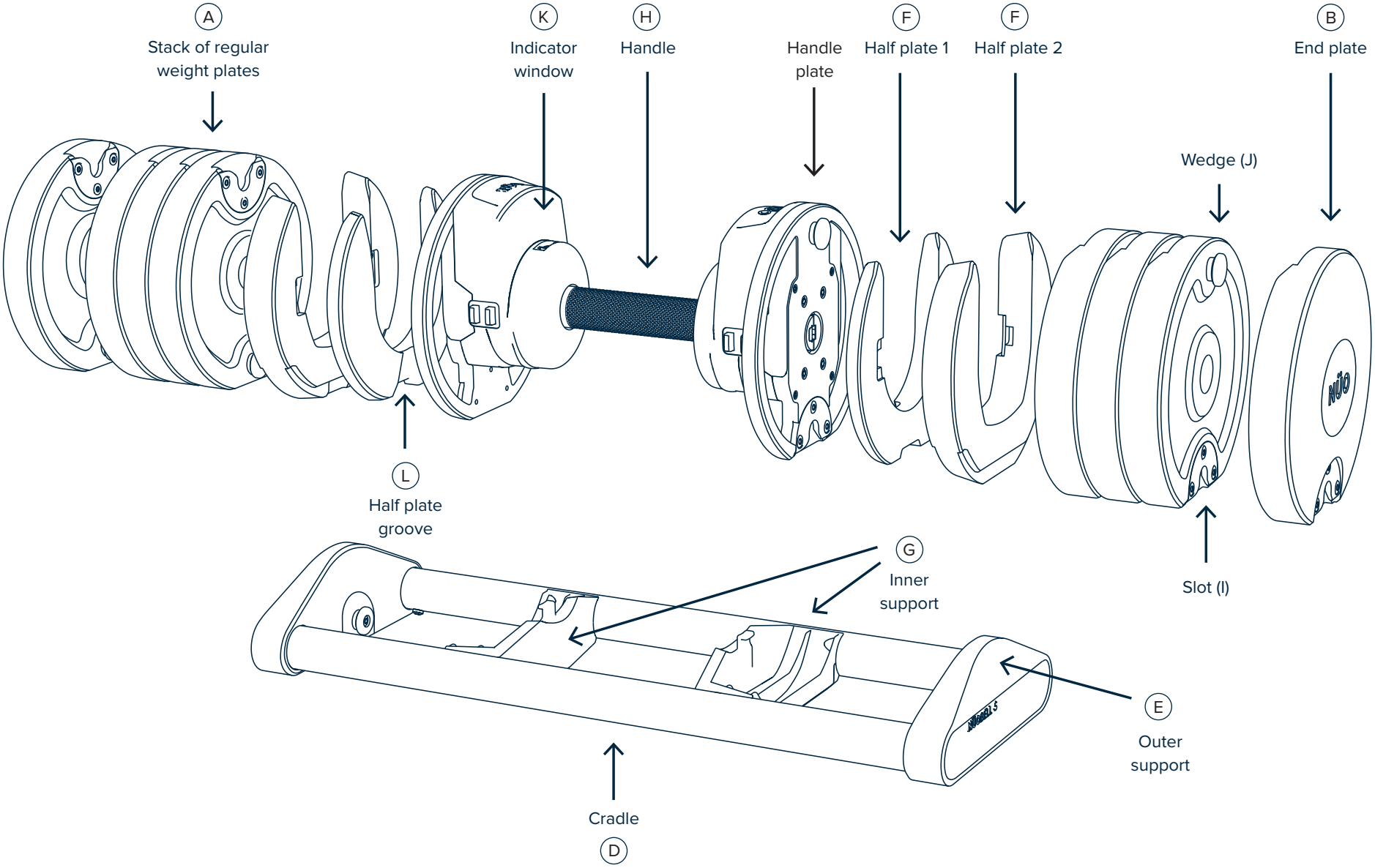

Step 1

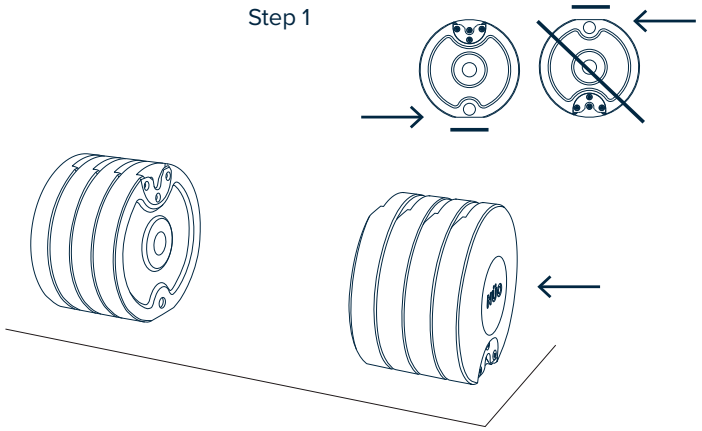

Unpack and prepare two symmetrical stacks (A) of connected weight plates on a flat surface, making sure that each stack has an end plate (B) with the logo. The flat side of the stack should point downwards.

Step 2

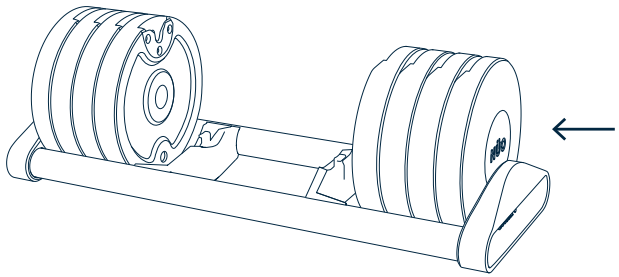

Place the stacks in the cradle (D), tightly positioned toward the outer supports (E). Make sure that the logo is pointing outwards.

Step 3

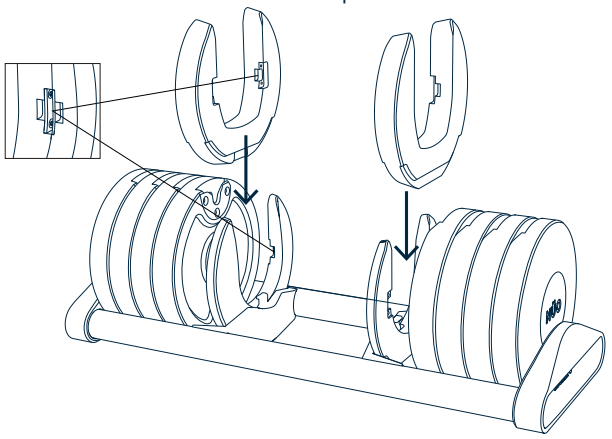

Insert the half plates (F) in the slot of the inner supports (G) on the cradle, making sure that the grooves (L) on the half plates face each other.

Step 4

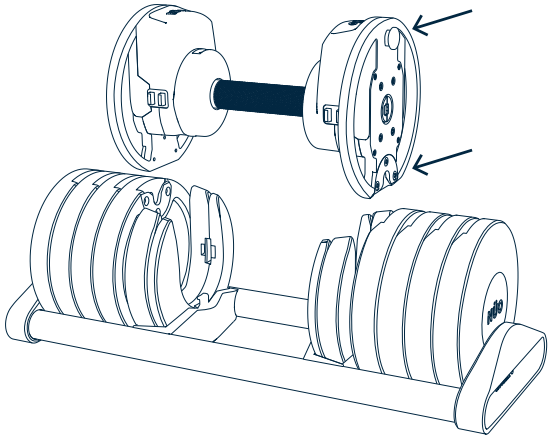

Place the handle (H) in the remaining space between weight stack and half plates, making sure that the slots (I) and wedges (J) connect properly.

Important!

Before using your NÜOBELL for the first time, and regularly thereafter, perform the three tests on this spread to confirm the locking mechanism engages correctly.

If the dumbbell fails any of these tests, discontinue use immediately. Do not attempt to repair the dumbbell yourself. Contact NÜO Athletic Innovation or an authorized service provider.

Test 1

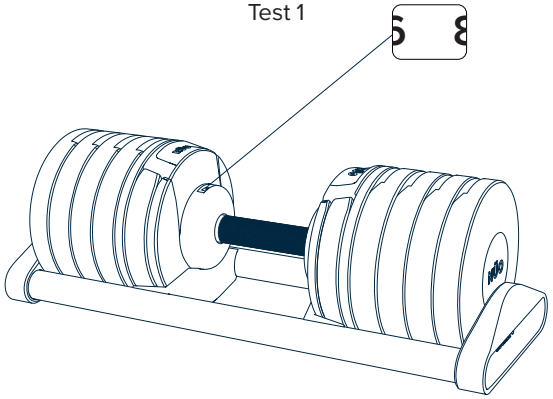

Make sure that the dumbbell cannot be lifted from the cradle if the weight selector is between two weight selections. **WARNING!** To use this mode as a way of lifting the complete dumbbell may cause damage, and is highly prohibited!

Test 2

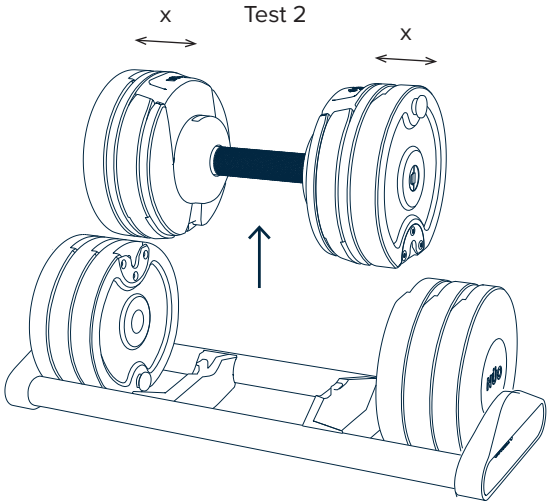

Select a weight by twisting the handle. Lift the dumbbell. Make sure that an equal in number of weight plates (x) on each side of the handle are lifted.

Test 3

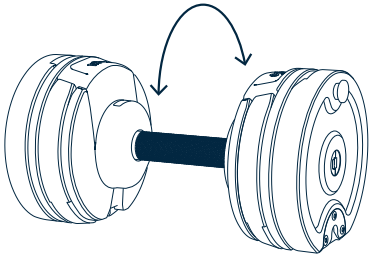

Place the dumbbell on a flat surface and make sure that the handle cannot be turned. **WARNING!** Do not use force!

Step 1

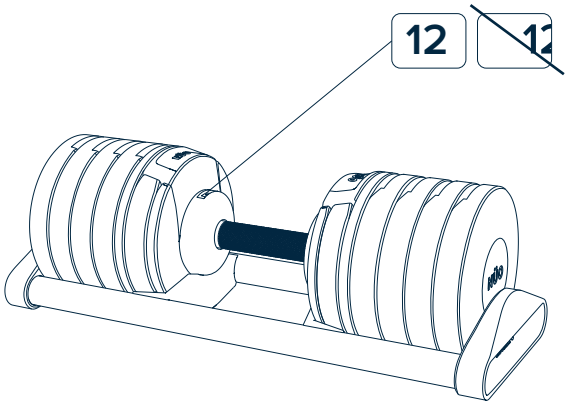

Only when docked in the cradle: select weight by turning the handle until desired weight is centered in the indicator window (K). **WARNING!** Adjust weight only when the dumbbell is fully seated in the cradle. Failure to do so may result in weight plates detaching and causing serious injury.

Step 2

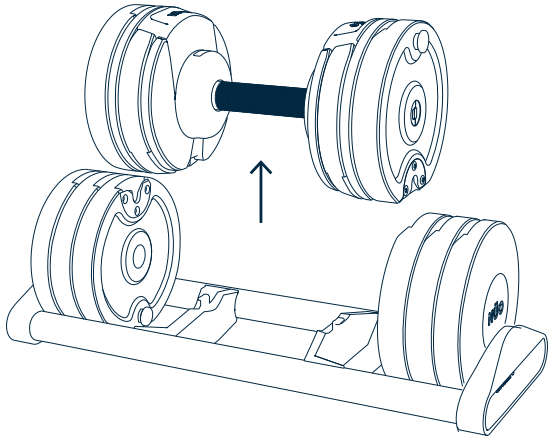

Lift the NÜOBELL S® straight up from the cradle. **WARNING!** Do not lift unless the selected weight is fully engaged and locked. Failure to do so may result in weight plates detaching and causing serious injury. Do not use kick-up techniques. Always lift the dumbbell straight up from the cradle.

Step 3

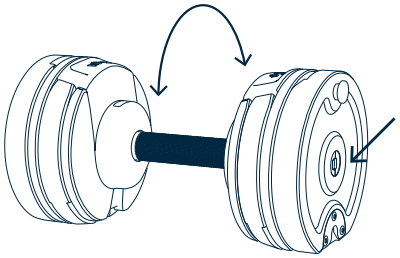

Place NÜOBELL S® on a flat surface. Confirm that the bar ends sit 5 mm inside the outer plate and that the handle cannot be turned. Start your exercise! **WARNING!** Failure to verify proper locking may result in sudden release of weight plates, causing serious injury.

Step 4

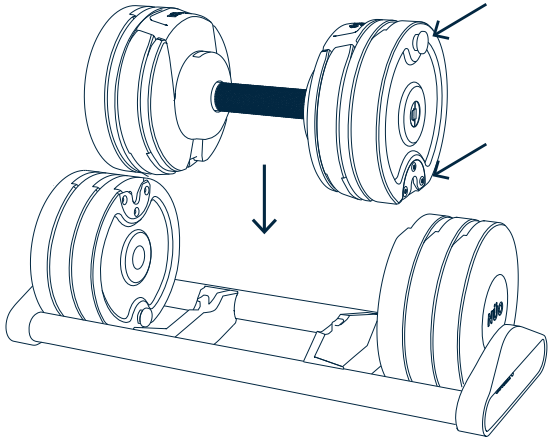

Return NÜOBELL S® to the cradle while aligning the slots and wedges on the connectors. Never attempt to use the dumbbell without having the complete set of weight plates in the cradle! **WARNING!** Misalignment of connectors may cause malfunction or weight separation during use, resulting in serious injury.

Lasting strength

As an owner of NÜOBELL S® Adjustable Dumbbells, you're the captain of upkeeping this ship. But don't sweat it, you've got yourself a low-maintenance gem. A regular inspection of the condition is usually all you need to do.

In case of damaged components, they must be replaced immediately. Damaged dumbbells should be on timeout until they get some quality repair time at a certified retailer using its original parts.

There are things that you can do to keep your dumbbells at their best. A little dirty? Gently wipe those handles, plates, or base with a cloth lightly dampened with warm water and mild soap. Wipe dry with a separate cloth. The dumbbells are lubricated, and no future treatments are required. Solvents, harsh detergents, chemicals, and bleach are not your gym buddies - they may damage your dumbbells.



Do not attempt to disassemble the dumbbells. NUO Athletic Innovation assumes no responsibility for injury or damage resulting from unauthorized disassembly, modification, or use of non-original parts.

Relaxation and recovery

We're not just muscle, we're heart too. We want to contribute to your peace of mind and to worry-free workouts. Therefore, your NÜOBELL S® Adjustable Dumbbells come with a 2-year warranty for residential use, starting from your purchase date.

Using your warranty

For warranty support, please contact the store where you purchased your dumbbells. Have your receipt in hand (original purchase receipt needed for all claims). Take a photo of the damage or record a video explaining the issue if possible. We are not responsible for distributor representations. In addition, shipping and handling for warranty replacements are to be paid for by the customer.

What's not covered

Dropping or slamming damage.

Wear and cosmetic marks not affecting use.

Damage from accidents, misuse, neglect, tampering, etc.

Using products against recommendations or in unanticipated environments.

If you have questions, reach us at https://nuoathletics.com/warranty/



NÜOBELL S® Pylon Floor Stand

You know what's making your new shiny adjustable dumbbells even better? Letting them rest in a powder coated steel sanctuary between sessions. It's not just smart; it's ergonomic, fun and adds flow to your workouts. And yes, a generous 2-year warranty awaits, as with all our products.

Net Weight: 33 LB (15 KG)

Product Dimensions: L-740 x H-610 x W-570 mm

Explore all our products and your local retailer at: nuoathletics.com

NÜOBELL S® U.S. App:

18/423,879, 18/423,891, 18/423,898

NÜOBELL Mechanism WIPO International Patent PCT

WO2021/239235

European NÜOBELL Mechanism Patent

EP20731806.4

Canada NÜOBELL Mechanism Patent

CA 3162082

Japan NÜOBELL Mechanism Patent

2020-570421

UK Pinion Gear Dumbbell

GB2517352

USA NÜOBELL

U.S. Patent No. 11,602,661

Twist Lock

U.S. Patent No. 8,529,415
U.S. Patent No. 8,715,143
U.S. Patent No. 8,932,188
U.S. Patent No. 9,452,312
U.S. Patent No. 9,566,465
U.S. Patent No. 9,616,271
U.S. Patent No. 9,669,252
U.S. Patent No. 9,889,331
U.S. Patent No. 10,232,216
U.S. Patent No. 11,013,947
U.S. Patent No. 11,135,469

Pinion Gear Dumbbell

U.S. Patent No. 8,529,415
U.S. Patent No. 8,715,143
U.S. Patent No. 8,784,283
U.S. Patent No. 9,452,312
U.S. Patent No. 9,616,271
U.S. Patent No. 9,669,252
U.S. Patent No. 9,974,994
U.S. Patent No. 10,092,790
U.S. Patent No. 10,232,214
U.S. Patent No. 10,232,216
U.S. Patent No. 10,773,118
U.S. Patent No. 11,013,947
U.S. Patent No. 11,135,469
U.S. Patent No. 11,389,688

Threaded Shaft Dumbbell

U.S. Patent No. 8,529,415
U.S. Patent No. 8,715,143
U.S. Patent No. 9,452,312
U.S. Patent No. 9,616,271
U.S. Patent No. 9,669,252
U.S. Patent No. 9,974,994
U.S. Patent No. 10,232,214
U.S. Patent No. 10,232,216
U.S. Patent No. 10,773,118
U.S. Patent No. 11,013,947
U.S. Patent No. 11,135,469
U.S. Patent No. 11,389,688

CE

PURCHASE AGREEMENT, ARBITRATION AGREEMENT AND WAIVER OF JURY TRIAL CLAUSE

1. BY PURCHASING THIS PRODUCT, YOU AND NUO ATHLETIC INNOVATION (“THE PARTIES”) AGREE TO ARBITRATE ALL DISPUTES, CONTROVERSIES, AND CLAIMS BETWEEN US. THIS ARBITRATION AGREEMENT IS A PART OF YOUR PRODUCT PURCHASE AGREEMENT.

2. NUO Athletic Innovation and you agree to arbitrate all claims arising out of or relating to any aspect of the relationship between us, whether based in contract, tort, statute, fraud, misrepresentation, or any other legal theory, including, without limitation:

A. (i) claims relating to the Product Purchase Agreement; (ii) claims relating to your product, and/or product use; (iii) claims relating to product service assistance provided by NUO Athletic Innovation; and (iv) any claim by either party, no matter how described, pleaded, or styled, relating, in any manner, to any act or omission regarding your relationship with NUO Athletic Innovation, its employees, or with externship sites or their employees;

B. claims that arose before this or any prior Product Purchase Agreement (including, but not limited to, claims relating to advertising or other solicitations to purchase from NUO Athletic Innovation);

C. claims that are currently the subject of purported class action litigation in which you are not a member of a certified class; and

D. any objection to arbitrability or the existence, scope, validity, construction, or enforceability of this arbitration agreement.

For purposes of this agreement, references to "NUO Athletic Innovation" include its parent company (Personality Gym AB), employees or subsidiaries, affiliates, agents, predecessors in interest, successors, and assigns.

3. Notwithstanding the foregoing, either party may bring an individual (not class) action in small claims court. This arbitration agreement does not preclude you from bringing issues to the attention of federal, state, or local agencies, including, for example, the Federal Trade Commission. Such agencies can, if the law allows, seek relief against us on your behalf.

YOU AGREE THAT, BY ENTERING INTO THIS AGREEMENT, YOU AND NUO ATHLETIC INNOVATION EACH WAIVE THE RIGHT TO A JURY TRIAL AND TO WAIVE THE RIGHT TO PARTICIPATE IN A CLASS ACTION.

4. CONFIDENTIALITY. The parties shall maintain the confidential nature of the arbitration proceeding and the Award, including the Hearing, except as may be necessary to prepare for or conduct the arbitration hearing on the merits, or except as may be necessary in connection with a court application for a preliminary remedy, a judicial challenge to an Award or its enforcement, or unless otherwise required by law or judicial decision.

5. GOVERNING LAW. The parties acknowledge that this Agreement evidences a transaction involving interstate commerce. Accordingly, this Agreement will be governed by and construed by federal law to the fullest extent possible, exclusive of its choice of law rules. To the extent there is no federal substantive law applicable to the dispute, the parties agree that the laws of the state of Texas will apply, exclusive of its choice of law rules. Notwithstanding the provision in this paragraph with respect to applicable substantive law, any arbitration conducted pursuant to the terms of this arbitration agreement will be governed by the Federal Arbitration Act (9 U.S.C. §§ 1-16) ("FAA"). All issues relating to the enforcement of this arbitration agreement and the arbitrability of claims will be determined pursuant to the substantive and procedural provisions of the FAA. The arbitrator, and not any federal, state, or local court or agency, will have exclusive authority to resolve any dispute relating to the interpretation, applicability, scope, enforceability or formation, and/or effect of this arbitration agreement, including, but not limited to, any claim that all or any part of this arbitration agreement is void or voidable. This arbitration agreement will survive termination of the Product Purchase Agreement.

6. NEUTRAL ARBITRATION. Any arbitration will be administered by Judicial Arbitration & Mediation Services ("JAMS") and governed by JAMS' Streamlined Arbitration Rules and Procedures or, if applicable, JAMS' Comprehensive Arbitration Rules and Procedures, and any applicable supplemental rules issued by JAMS and in effect at the time the arbitration is filed, including, if applicable, JAMS' Consumer Arbitration Standards of Minimum Fairness. The JAMS rules are available online at http://www.-jamsadr.com/rules-clauses/, by calling JAMS at 8003525267, from a local JAMS office, or by writing to the Notice Address.

7. NOTIFICATION. A party who intends to seek arbitration must first send to the other, by certified mail, a written Notice of Dispute ("Notice"). The Notice to NUO Athletic Innovation regarding any

arbitration claims should be addressed to: NUO Athletic Innovation, Attention: Simon | Paschal PLLC, 5300 Town and Country Blvd., Suite 155, Frisco, Texas 75034 USA ("Notice Address"). The Notice must (a) describe the nature and basis of the claim or dispute; and (b) set forth the specific relief sought ("Demand"). You may download or copy a form Notice and a form to initiate arbitration at: https://www.jamsadr.com/rules-download/.

8. CONSUMER'S RIGHT TO AN IN-PERSON HEARING. Unless NUO Athletic Innovation and you agree otherwise, any arbitration hearings will take place in the county (or parish) of your mailing or residence address, whichever you prefer, provided that JAMS has an office in that county (or parish). If JAMS does not have an office in that county (or parish), the arbitration will take place at a JAMS location in the closest county (or parish) to the one in which you reside. If your claim is for $10,000 or less, we agree that you may choose whether the arbitration will be conducted solely on the basis of documents submitted to the arbitrator, through a telephonic hearing, or by an in-person hearing as established by the JAMS rules. If your claim exceeds $10,000, the right to a hearing will be determined by the JAMS rules.

9. INITIATING ARBITRATION. Initiating an arbitration requires payment of a filing fee. Currently, that filing fee is $250, and is approximately equivalent to current court filing fees; but the amount of the fee is subject to change by JAMS. Generally, the filing fee is the only fee you will be required to pay to JAMS in connection with the arbitration: all other costs of administering the arbitration will be paid by NUO Athletic Innovation, including any remaining JAMS Case Management Fees and all professional fees for the arbitrator's services; however, if you initiate an arbitration in which you seek more than $75,000 in damages, the payment of these fees will be governed by JAMS Comprehensive Arbitration Rules and Procedures without reference to its Consumer Arbitration Standards of Minimum Fairness. If NUO Athletic Innovation initiates an arbitration, NUO Athletic Innovation will pay all costs associated with the arbitration.

10. FEES AND COSTS TO PREVAILING PARTY. Except as otherwise provided for in Paragraph 9 above, NUO Athletic Innovation will pay all JAMS filing, administration, and arbitrator fees for any arbitration initiated in accordance with the notice requirements above. If, however, the arbitrator finds that either the substance of or relief sought in your claim is frivolous or brought for an improper purpose (as determined by the standards set forth in the Federal Rules of Civil Procedure 11(b)), then the payment of all such fees will be governed by applicable JAMS rules. In such case, you agree to reimburse NUO Athletic Innovation for all monies previously disbursed by it that are otherwise your obligation to pay under the JAMS rules.

11. YOU AND NUO ATHLETIC INNOVATION AGREE THAT EACH MAY BRING CLAIMS AGAINST THE OTHER ONLY IN YOUR OR ITS INDIVIDUAL CAPACITY, AND NOT AS A PLAINTIFF OR CLASS MEMBER IN ANY PURPORTED CLASS OR REPRESENTATIVE PROCEEDING. Further, unless both you and NUO Athletic Innovation agree otherwise, the arbitrator may not consolidate more than one person's claims, and may not otherwise preside over any form of a representative or class proceeding.

12. DOCUMENT REQUESTS AND E-DISCOVERY. In any arbitration arising out of or related to this Agreement, the Parties shall cooperate in good faith in the voluntary and informal exchange of all non-privileged documents and other information (including electronically stored information ('ESI')) relevant to the dispute or claim immediately after commencement of the arbitration. They shall complete an initial exchange of all relevant, non-privileged documents, including, without limitation, copies of all documents in their possession or control on which they rely in support of their positions, and names of individuals whom they may call as witnesses at the Arbitration Hearing, within twenty-one (21) calendar days after all pleadings or notice of claims have been received. The Arbitrator may modify these obligations at the Preliminary Conference.

13. PUNITIVE DAMAGES. In any arbitration arising out of or related to this Agreement, the arbitrator(s) are not empowered to award punitive or exemplary damages, except where permitted by statute, and the parties waive any right to recover any such damages.

14. LIMITED LIABILITY. In any arbitration arising out of or related to this Agreement, the arbitrator(s) may not award any incidental, indirect or consequential damages, including damages for lost profits. The arbitrator has no authority to award attorneys' fees except as expressly provid-

ed by the Product Purchase Agreement or authorized by law or the JAMS rules. The arbitrator is not permitted to commit errors of law, and any arbitration award may be vacated or corrected on appeal to a court of competent jurisdiction based on any such errors of law. Regardless of the manner in which the arbitration is conducted, the arbitrator will issue a reasoned written decision sufficient to explain the essential findings and conclusions on which the award is based. Any court having competent jurisdiction may enter judgment on any award rendered by the arbitrator.

15. REMEDIES AND RELIEF. The arbitrator is bound by the terms of this arbitration agreement. The arbitrator may award declaratory or injunctive relief only in favor of the individual party seeking relief, and only to the extent necessary to provide relief warranted by that party's individual claim. The arbitrator has the authority to award monetary damages and may grant any non-monetary remedy or relief available under applicable law, but has no authority to award damages, remedies, or relief that would not be available under applicable law.

16. APPEAL. We agree that either party has the option to appeal any award rendered by the arbitrator, by filing an appeal with JAMS' Appellate Panel.
The Parties adopt and agree to implement the JAMS Optional Arbitration Appeal Procedure (as it exists on the effective date of this Agreement) with respect to any final award in an arbitration arising out of or related to this Agreement. The rules regarding the JAMS Optional Arbitration Appeal Procedure may be found at this link: https://www.jamsadr.com/files/Uploads/Documents/JAMS-Rules/JAMS_Optional_Appeal_Procedures-2003.pdf.

17. ENFORCEABILITY AND SEVERABILITY. If any part of this arbitration agreement is found to be invalid or unenforceable, that specific part will be severed, but the remainder of this arbitration agreement will continue in full force and effect. Any or all of the limitations set forth in this arbitration agreement may be specifically waived by the party against whom the claim is asserted. Such waiver shall not waive or affect any other portion of this arbitration agreement. This arbitration agreement is an integrated document and supersedes any other written or verbal agreements as to its subject matter. This arbitration agreement is to be broadly construed in favor of arbitration and will survive the termination of your relationship with NUO Athletic Innovation.

A digital version of NUO Athletic Innovation's Purchase Agreement, Arbitration Agreement and Waiver of Jury Trial Clause may be downloaded at www.nuoathlethics.com/Terms-and-Conditions.pdf/. NUO Athletic Innovation reserves the right to update this Agreement from time to time as necessary to comply with the Federal Rules of Civil Procedure, JAMS' Streamlined Arbitration Rules and Procedures, JAMS' Comprehensive Arbitration Rules and Procedures, and any applicable supplemental rules issued by JAMS and in effect at the time the arbitration is filed, including, if applicable, JAMS' Consumer Arbitration Standards of Minimum Fairness.

USA
NUO Athletic Innovation
661 E Main Street #200 PMB 237
Midlothian, TX USA
Customer Support: 1 877 431 2010
info@nuoathletics.com

Sweden
Personality Gym AB
Norrlandsgatan 11
111 43 Stockholm, Sweden
Customer Support: +46 36 31 20 10
info@nuoathletics.com

Global Authorized Resellers
https://nuoathletics.com/resellers/

NÜOBELL is a trademark owned or licensed by Personality Gym AB, registered, or otherwise protected by common law in the U.S. and other countries.

2026 NÜOBELL® Safety Manual – English Version. All Rights Reserved.